DWG NO	SH	REV
127-3055D7	1	A

PROPRIETARY AND CONFIDENTIAL

REVISIONS

REV.	ECN	DESCRIPTION	BY/DATE	CHK	APPR
A	14614	INITIAL RELEASE. SAME AS REV X3.	KG 12/01/20	RA	DV

VARIATION TABLE

MODEL	SENSITIVITY
3055D7	100mV/g
3055D8	50mV/g
3055D9	20mV/g
3055D10	10mV/g
3055D13	200mV/g
3055D14	500mV/g

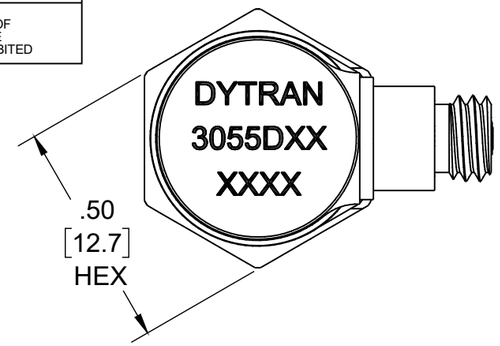

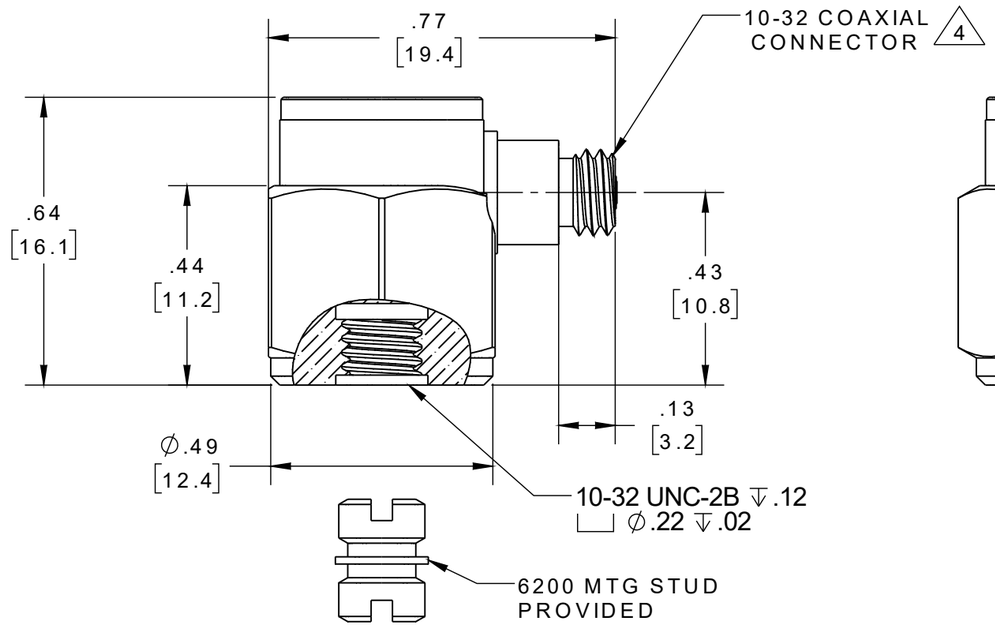

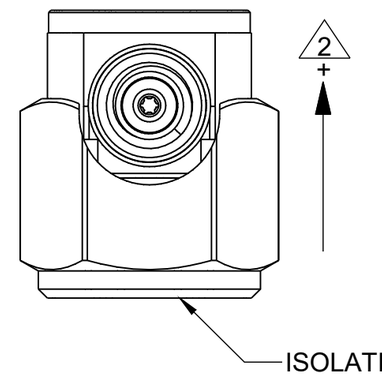

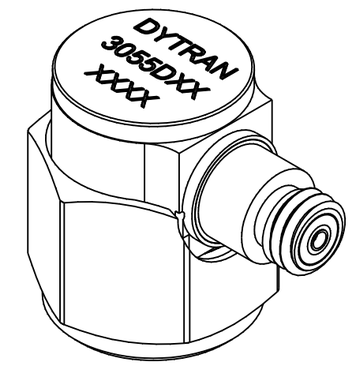

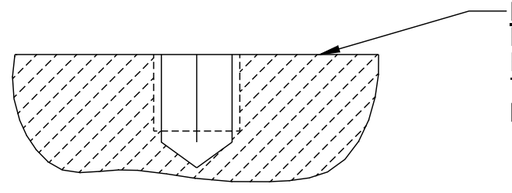

MOUNTING RECOMMENDATION:
PREPARE A .55 [14] X .55 [14] MIN SURFACE,
FLAT TO .001 TIR.
TAP 10-32 UNF-2B ↧.15 [3.8] MIN.
MOUNTING TORQUE: 10-12 Lb-in.

5. OPERATING TEMPERATURE: -67°F TO +320°F [-55°C TO +160°C]
4. MATES WITH DYTRAN 6010AXX OR 6011AXX CABLE (XX=LENGTH IS FEET).
3. WEIGHT: 10 GRAMS, MAX.
2. ARROW INDICATES ACCELERATION DIRECTION FOR POSITIVE OUTPUT.
1. MATERIAL: TITANIUM ALLOY

NOTES: UNLESS OTHERWISE SPECIFIED

UNLESS OTHERWISE SPECIFIED:
INTERPRET DIM & TOL PER ASME Y14.5M - 1994.
REMOVE BURRS.
COUNTERSINK INTERNAL THDS 90° TO MAJOR DIA.
CHAM EXT THDS 45° TO MINOR DIA.
THD LENGTHS AND DEPTHS ARE FOR MIN FULL THDS.
DIMENSIONS APPLY AFTER FINISHING.

63
ALL MACHINED SURFACES.
TOTAL RUNOUT WITHIN .005.
BREAK SHARP EDGES .005 TO .010.
MACHINED FILLET RADII .005 TO .015.
WELDING SYMBOLS PER AWS A2.4.
ABBREVIATIONS PER MIL-STD-12.

UNLESS OTHERWISE SPECIFIED:
DIMENSIONS ARE IN INCHES.
DIMENSIONS IN BRACKETS [ ] ARE IN MILLIMETERS TOLERANCES ARE:

DECIMALS	METRIC	ANGLES
.XX ±.03	.X ±0.8	±1°
.XXX ±.010	.XX ±0.25	

APPROVALS		DATE
ORIG	LN	03/10/17
CHK		
APP		

DO NOT SCALE DRAWING

THIRD ANGLE PROJECTION USA

DYTRAN INSTRUMENTS, INC. Chatsworth, CA

TITLE: OUTLINE/INSTALLATION DWG, SINGLE AXIS ACCEL, 320F, ISOLATED, 3055D7 SERIES

SIZE	CAGE CODE	DWG NO	REV
B	2W033	127-3055D7	A

SCALE: 3:1 SHEET 1 OF 1

172-0186 REV A

Model Number	PERFORMANCE SPECIFICATIONS	DOC NO
3055D10		PS3055D10
	IEPE ACCELEROMETER	REV A, ECN 14614, 12/01/20

- **-67 °F TO +320°F OPERATION**
- **BASE ISOLATED**
- **IDEAL LOW FREQUENCY RESPONSE**
- **HERMETICALLY SEALED**

This family also includes:

Model	Sensitivity (mV/g)	Frequency Response, ±10% (Hz)	Time Constant (Sec)	Operating Temp (°F)
3055D7	100	1 to 10000	0.5 to 1.5	-67 to +320
3055D8	50	1 to 10000	0.5 to 1.5	-67 to +320
3055D9	20	1 to 10000	0.5 to 1.5	-67 to +320
3055D13	200	1 to 10000	0.5 to 1.5	-67 to +320
3055D14	500	1 to 10000	0.5 to 1.5	-67 to +320

Refer to the performance specifications of the products in this family for detailed description

		ENGLISH		SI	
PHYSICAL					
Weight		0.35	oz	10	grams
Connector	Type	10-32		10-32	
Mounting Provision	Tapped Hole	10-32 Tapped hole		10-32 Tapped hole	
Material, Housing/Connector		Titanium		Titanium	
Sensing Element		Ceramic		Ceramic	
Element Style		Planar Shear		Planar Shear	
PERFORMANCE					
Sensitivity, ± 5% [2]		10	mV/g	1	$mV/m/s^2$
Range for ± 5 Volts Output		±500	g pk	±4,905	m/s^2 pk
Frequency Response, ± 5%		1 to 5000	Hz	1 to 5000	Hz
Frequency Response, ± 10%		1 to 10000	Hz	1 to 10000	Hz
Resonant Frequency		> 36	kHz	> 36	kHz
Broad Band Resolution		0.004	g RMS	0.039	m/s^2 RMS
Linearity [3]		±1	% F.S.	±1	% F.S.
Maximum Transverse sensitivity		5	%	5	%
Strain Sensitivity @ 250με		0.002	g/με	0.02	$m/s^2/\mu\varepsilon$
ENVIRONMENTAL					
Maximum Shock		±5,000	g pk	49050	m/s^2 pk
Temperature Range		-67 to +320	°F	-55 to +160	°C
Seal		Hermetic		Hermetic	
ELECTRICAL					
Supply Current Range [4]		2 to 5	mA	2 to 5	mA
Compliance Voltage Range		+18 to +30	Volts	+18 to +30	Volts
Output Impedance,Typ		100	Ω	100	Ω
Bias Voltage		+10 to +13	VDC	+10 to +13	VDC
Discharge Time Constant		0.5 to 1.5	Sec	0.5 to 1.5	Sec
Electrical Isolation		10	GΩ, min	10	GΩ, min

Supplied Accessories:

1) Accredited calibration certificate (ISO 17025)
2) Model 6200 mounting stud, Qty. 1

Notes:

[1] All specifications are at room temperature unless otherwise specified.
[2] Measured at 100Hz, 1 g RMS per ISA RP 37.2.
[3] Measure using zero-based straight line method, % of F.S. or any lesser range.
[4] Do not apply power to this system without current limiting, 5 mA MAX. To do so will destroy the IC charge amplifier.
[5] In the interest of constant product improvement, we reserve the right to change specifications without notice.
It is the customer's responsibility to validate that a particular product with the properties described in the product specification is suitable for use in a particular application. Parameters provided in datasheets and / or specifications may vary in different applications and performance may vary over time. All operating parameters, including typical parameters, must be validated for each customer application by the customer's technical experts.

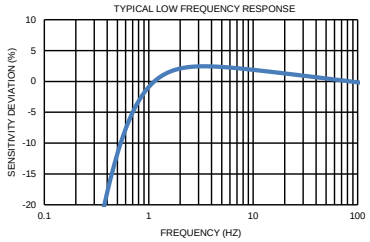

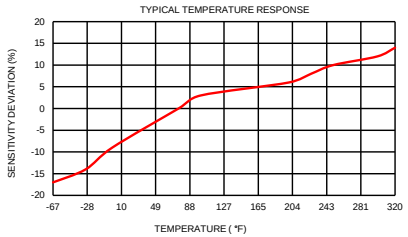

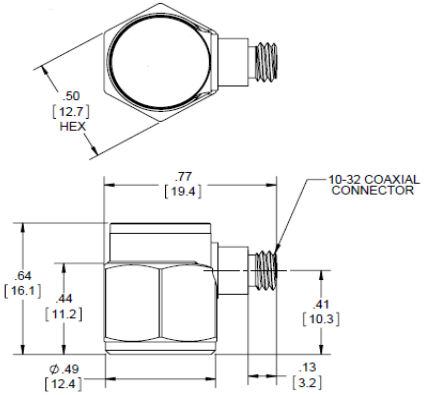

Units on the line drawing are in inches, units in brackets are in millimeters. Refer to 127-3055D7 for more information.

DYTRAN INSTRUMENTS, INC.
21592 Marilla Street, Chatsworth, California 91311 Phone: 818.700.7818 Fax:818.698.0362 www.dytran.com